ICA2025OSLO
14th IWA Specialised Conference on
Instrumentation, Control and Automation

# Enhancing Benchmark Simulation Models with Industry Components: Progress Towards What-If Simulation Scenarios

Andrea A. Ferraro Martínez*, Javier F. Gàmiz*, J. Vicario**, M. Barbu***, R. Vilanova**

* andrea.alexandra.ferraro@estudiantat.upc.edu, javier.gamiz@upc.edu

** Jose.Vicario@uab.cat, Ramon.Vilanova@uab.cat

*** Marian.Barbu@ugal.ro

**Abstract:** The enhancement of Benchmark Simulation Models (BSM) with industry components is a crucial step toward transforming wastewater treatment into a smarter, more adaptive, and sustainable sector. By bridging the gap between academic research and operational realities, these enriched models drive innovation, improve efficiency, and support the development of robust solutions to emerging challenges. Their relevance extends beyond research, serving as essential tools for training, decision-making, and the design of next-generation wastewater treatment systems. This enhancement is considered as a pivotal step toward advancing Digital Twin technology for wastewater treatment plants. This synergy not only accelerates innovation and research but also provides a robust platform for training, proactive maintenance, and real-time decision-making. Together, enhanced BSMs and Digital Twins represent a transformative shift in how wastewater systems are designed, managed, and optimized for the future. In this work, we present an extension of MATLAB based BSM implementations that takes advantage of OPC-UA connectors allowing the incorporation of common industrial components such as SCADA systems, PLCs, etc into the simulation settings. Specifically, connection with Ignition SCADA systems and Rockwell PLCs for programming the PID, low level, controllers as embedded into BSM1.

**Keywords**: Three to four keywords separated by; semi-colons

## INTRODUCTION

The International Water Association (IWA) Benchmark Simulation Models (BSM1, BSM1_LT, BSM2) consist of a predefined plant layout, process models, sensor and actuator models, influent wastewater characteristics and evaluation criteria (Jeppsson et al., 2013). They were originally developed with the objective to evaluate control strategies in wastewater treatment plants (WWTPs) and have been widely used in both industry and academia. Up to date, hundreds of reserach publications are related to the BSM family products. Although, there has been a lot of progress in the BSMs, all of them are focussed on inside-the-fence evaluation of the WWTP performance. However, as the wastewater industry evolves toward smarter, more sustainable solutions, the enhancement of BSMs with real-world industry components has become increasingly vital. This integration bridges the gap between theoretical modelling and practical application, unlocking new opportunities for innovation and operational excellence.

In addition to the previous considerations, Digital Twin technology has emerged as a transformative tool in modern wastewater treatment, offering unprecedented opportunities for operational efficiency, sustainability, and resilience. By creating a dynamic virtual replica of physical wastewater treatment plants, Digital Twins enable real-time monitoring, predictive analytics, and scenario modelling. These capabilities allow operators to optimize energy usage, enhance system reliability, and minimize environmental impact. The integration of Digital Twins with IoT sensors and advanced data analytics facilitates early detection of system anomalies, reducing downtime and operational costs (Kretschmer et al., 2022). Furthermore, they support the design and testing of innovative treatment strategies without disrupting physical operations, accelerating advancements in plant performance (Ghaffarian Hoseini et al., 2021).

In the face of increasing regulatory demands and the need for sustainable water management, Digital Twins play a pivotal role in addressing challenges such as resource efficiency, climate adaptation, and compliance (Pérez et al., 2023). Their application transforms wastewater treatment plants into smarter, adaptive systems capable of meeting the needs of modern urban environments. This abstract underscore the critical role of Digital Twin technology in reshaping the wastewater sector, emphasizing its potential to drive innovation, efficiency, and environmental stewardship.

## ENHANCING BENCHMARK SIMULATION MODELS WITH INDUSTRY COMPONENTS

Benchmark Simulation Models (BSMs) have long been the cornerstone of research and development in wastewater treatment, providing standardized, validated frameworks for studying process dynamics, optimization, and control strategies. However, as the wastewater industry evolves toward smarter, more sustainable solutions, the enhancement of BSMs with real-world industry components is seen as a vital component towards extending simulation capabilities towards the Digital twin concept as the natural evolution of Enhanced BSMs. This integration bridges the gap between theoretical modelling and practical application, unlocking new opportunities for innovation and operational excellence. Some of those advantages and opportunities are highlighted below.

1. **Increased Realism and Applicability:** Standard BSMs, such as BSM1 and BSM2, are designed as generic representations of treatment processes. While useful for research, they may oversimplify certain complexities present in real-world facilities. Incorporating industry components such as proprietary equipment models, specific operational constraints, and real-time data from sensors significantly enhances the realism and applicability of these models. This ensures that simulations align more closely with the unique challenges and configurations of operational plants.

2. **Facilitating Advanced Control Strategies:** Modern WWTPs increasingly rely on advanced automation and control systems, including predictive control and machine learning algorithms. Enhanced BSMs with industry components enable the testing and validation of these strategies under realistic conditions. For example, integrating real-world actuator dynamics, energy consumption profiles, or sensor noise into BSMs allows for the development of robust and energy-efficient control strategies that are directly transferable to plant operations.

3. **Supporting Digital Twin Development:** Digital Twins, virtual replicas of physical systems, are revolutionizing wastewater treatment by enabling real-time monitoring, predictive maintenance, and optimization. Enhanced BSMs serve as the foundational layer for building Digital Twins by incorporating site-specific data, such as inflow variability, equipment characteristics, and operational constraints. This symbiosis creates a powerful tool for continuous plant improvement, fostering adaptability in response to fluctuating demands and regulatory requirements.

4. **Enabling Customization and Scalability:** No two WWTPs are identical; each operates under unique hydraulic conditions, treatment goals, and regulatory pressures. Enhancing BSMs with industry-specific components allows for customization to meet the needs of diverse facilities. This adaptability makes it possible to simulate and optimize processes for small-

scale decentralized systems, large municipal plants, or even industrial wastewater treatment setups.

**5. Bridging Research and Industry Needs:** Enhanced BSMs create a collaborative platform for academia and industry by aligning research models with practical requirements. Researchers can test cutting-edge technologies and strategies under conditions that mimic real-world environments, while industry professionals benefit from insights that are directly applicable to their operations. This synergy accelerates the pace of innovation and drives the adoption of best practices across the sector.

## AUGMENTED BSM1SCENARIO: EMBEDING OPC-UA, IGNITION AND ROCKWELL

The scenario presented in this work extends BSM simulation capabilities with the adding of OPC-UA communication standard. This provides an open door to augmented simulation and training capabilities. This is obviously connected to the, by now established Digital Twin concept. We emphasize how these enriched models become the foundation for creating highly functional and impactful Digital Twins.

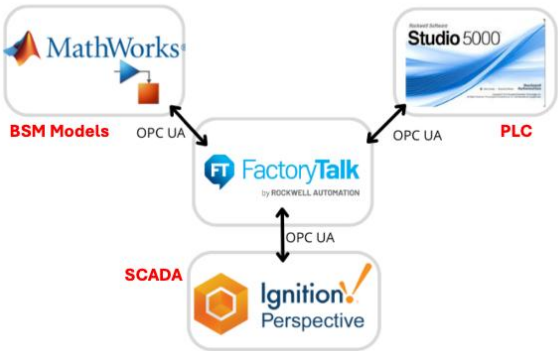


**Figure 1** Technologies scenario for the enhancement of Benchmark Simulation Models (BSM) with industry components

**Figure 1**. shows the different technologies used in this work to configure BSM1 as a what-if simulation scenario driven from the SCADA. In this specific case, IGNITION has been used. The SCADA system conducts monitoring and supervision actions. In addition, the field PI/PIS controllers that are usually programmed as SIMULINK block, are implemented here in ROCKWELL PLCs, by using exactly the function block provided on such devices for implementing PID control. Details of the SCADA monitoring implementation, how influent driven simulations can be launched from the SCADA system etc are provided in the full paper. Also details of the PLC implementation of the PID controllers as substitutes of the usual, theoretical, SIMULINK controllers usually considered.

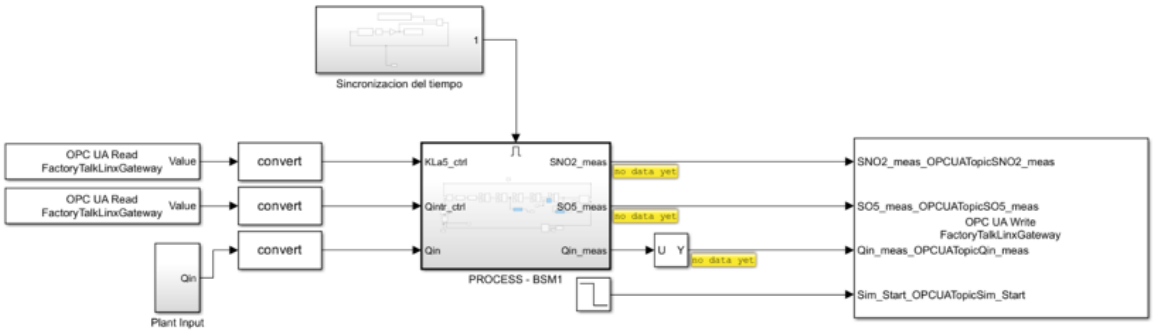


**Figure 2** Detail of MATLAB/SIMULINK BSM1 implementation with OPC UA connectors for influent definition, PLC control and measurements collection.

As a complement, **Fig. 2** shows the SIMULNK detail on how BSM1 is encapsulated and connected using OPC-UA to the OPC-UA server. This allows a) SCADA system to access the BSM1 measures; b) drive the control actions generated at the PLC; c) launch what-if simulations to test control and operation. This scenario can be enhanced and augmented, of course configured, to include other measurements, higher level control actions, etc.

## CONCLUSION

The enhancement of Benchmark Simulation Models with industry components is a crucial step toward transforming wastewater treatment into a smarter, more adaptive, and sustainable sector. By bridging the gap between academic research and operational realities, these enriched models drive innovation, improve efficiency, and support the development of robust solutions to emerging challenges. Their relevance extends beyond research, serving as essential tools for training, decision-making, and the design of next-generation wastewater treatment systems.

## REFERENCES

Jeppsson, U., Alex, J., Batstone, D. J., Benedetti, L., Comas, J., Copp, J. B., Corominas, L., Flores-Alsina, X., Gernaey, K. V., Nopens, I., Pons, M.-N., Rodríguez-Roda, I., & Vanrolleghem, P. A. (2013). Benchmark simulation models, quo vadis? Water Science & Technology, 68(1), 1–15

Kretschmer, J., Schneider, M., & Müller, E. (2022). The Role of Digital Twins in Smart Wastewater Management: A Comprehensive Review. Journal of Environmental Technology and Innovation, 24(1), 102367.

Ghaffarian Hoseini, A., Berardi, U., & Dahlan, N. (2021). Digital Twin Applications in Urban Water Systems: Challenges and Opportunities. Sustainable Cities and Society, 65, 102555.

Pérez, M., Sánchez, R., & Gil, J. (2023). Innovative Applications of Digital Twins for Climate Resilient Wastewater Treatment Plants. Environmental Advances, 9, 100315.