ICA2025OSLO
14th IWA Specialised Conference on
Instrumentation, Control and Automation

# Model-based Cooperative Control of a Simulated Urban Drainage Network

Yongjie Wang*, Finn Aakre Haugen**

*, ** Faculty of Technology, Natural Sciences and Maritime Sciences. Department of Electrical engineering, Information Technology and Cybernetics. University of South-Eastern Norway (USN), Porsgrunn, Norway. *Yongjie.Wang@usn.no, **Finn.Haugen@usn.no.

**Abstract:** This study compares Centralized, Decentralized, and Distributed Model Predictive Control (MPC) strategies for water level tracking, energy consumption, and overflow prevention in urban drainage networks. The study is based on a simulated four-tank system with transport delays and varying inlet flows representing a 42 km tunnel in Norway. Mathematical models were derived from mass balance equations. Results demonstrate significant performance differences: Centralized MPC achieved coordinated actions but exhibited single-point-of-failure vulnerability; Distributed MPC showed excellent performance level control with information exchange with neighbour subsystems, achieving near-optimal coordination while maintaining fault tolerance; Decentralized MPC offered maximum fault tolerance and least computation complexity but suboptimal performance. Overflow analysis showed Centralized and Distributed MPC reduced total overflow by ~90% compared to Decentralized MPC. The findings validate performance-reliability trade-offs between global optimization (Centralized), local independence (Decentralized), and iterative convergence (Distributed), recommending Distributed MPC for medium-scale networks, Centralized MPC for overflow-critical applications, and Decentralized MPC for fault-tolerant large-scale systems.

**Keywords:** centralized control; distributed control; overflow reduction; transport delay

## 1. INTRODUCTION

This research explores implementing model-based control algorithms in a simulator of an existing urban drainage system in Norway, which is a 42 km long tunnel transports rainwater and sewage to a Wastewater treatment plant (WWTP) named VEAS (VEAS, 2018). To ensure the efficient operation of the plant in real-world conditions, the system must meet several requirements, such as the inflow to the plant shall be smoothed, avoiding abrupt pump station actions, the water levels in the storage volumes must stay within defined limits despite varying inflows, the pump/gate flow rate and its variations must be controlled within acceptable bounds, etc.

A key challenge in real-world drainage systems is the presence of transport delays (García-Gutiérrez et al., 2015). It may require hours for water or signals to propagate through channels or between system components. As urban drainage systems are interconnected, to handle multivariable dynamics and constraints, coordinated actions between actuators provide benefits to utilize the volumes upstream and downstream in the network (Lund et al., 2018).

This work focuses on the following objectives:

- Mathematical modelling of a four-tank system that simulates a network, enabling a detailed understanding of the system dynamics.
- Model-based coordinated level control of the four volumes. Compensation for transport delays in the system.
- Computation complexity analysis and trade-offs of different control algorithms.

## 2. MATERIAL AND METHODS

This section describes the modelling and simulation methods. Three MPC architectures, Centralized MPC, Decentralized MPC, and Distributed MPC are introduced and compared for coordinated control of the simulated four-tank system with transport delay.

### 2.1 System Dynamics and Modelling

The VEAS tunnel system is simplified as a simulated four-tank system, shown in Figure 2.1, for testing model-based cooperated control of the pumps and gates. As illustrated, the system consists of four interconnected tanks $V_{1\ldots4}$ with different sizes, regulated in real-time by pumps and gates based on the measurements of water levels. $V_2$ and $V_4$ have overflow ports therefore excess water during heavy rainfall can be drained directly. The goal is to maintain stable water levels and minimize energy use while respecting system constraints, handling delays, and minimize overflow.

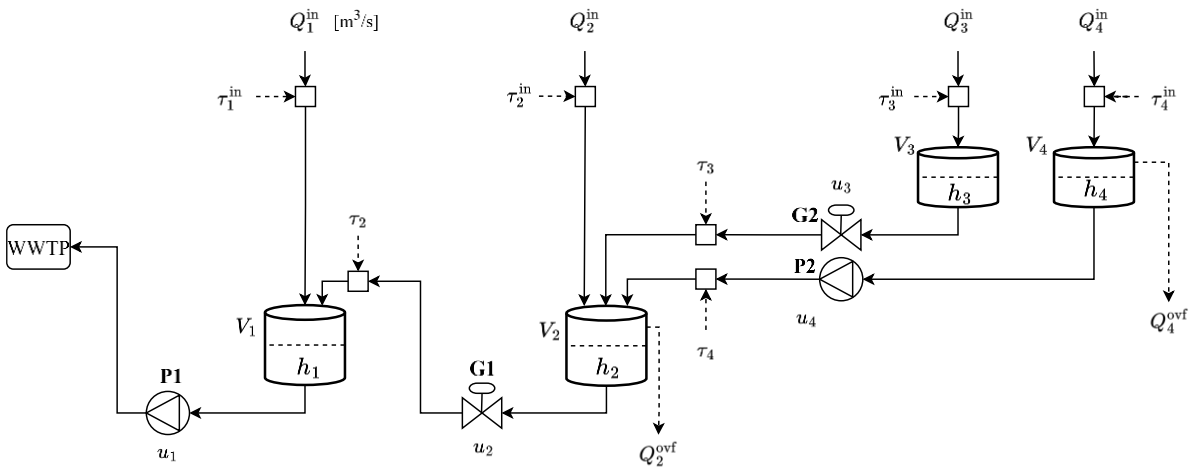


**Figure 2.1** Schematic of the four-tank wastewater network. $h_i$ [m] and $A_i$ [m$^2$] are the level measurement and cross-sectional area in tank $V_i$. $u_i$ [m$^3$/s] represent the controlled outflow. $\tau_i^{in}$ [s] and $\tau_i$ [s] are transport delays of the inlet and the inter-tank flow. $Q_i^{in}$ [m$^3$/s] are the inlet flow rate and $Q_i^{ovf}$ [m$^3$/s] are the overflow out of tanks.

The following differential equations derived from mass balance of each tank describe the dynamics of the four-tank system in Figure 2.1.

$$\dot{h}_1(t) = \frac{1}{A_1}\left[u_2(t-\tau_2) + Q_1^{in}\left(t-\tau_1^{in}\right) - u_1(t)\right] \tag{1}$$

$$\dot{h}_2(t) = \frac{1}{A_2}\left[u_3(t-\tau_3) + u_4(t-\tau_4) + Q_2^{in}\left(t-\tau_2^{in}\right) - Q_2^{ovf}(t) - u_2(t)\right] \tag{2}$$

$$\dot{h}_3(t) = \frac{1}{A_3}\left[Q_3^{in}\left(t-\tau_3^{in}\right) - u_3(t)\right] \tag{3}$$

$$\dot{h}_4(t) = \frac{1}{A_4}\left[Q_4^{in}\left(t-\tau_4^{in}\right) - Q_4^{ovf}(t) - u_4(t)\right] \tag{4}$$

These equations highlight that the system subjects to multiple transport delays that complicate controller design. The transport delays can be determined experimentally or estimated using methods such as cross-correlation (Favennec, et al., 1982).

### 2.2 Control Strategies

MPC (Haugen, 2010, p.273) solves an optimal control problem at each step over a finite prediction horizon. Three MPC configurations in Figure 2.2 will be tested for coordinated control possibilities:

- *Decentralized MPC* operates fully independently without exchanging information with others (Single-Input-Single-Output, SISO).
- *Centralized MPC* uses complete system-wide information and global optimization (Multi-Input-Multi-Output, MIMO)
- *Distributed MPC* (Venkat, 2006) is like Decentralized MPC but adds information exchange with neighbors and solves optimization iteratively until convergence at every time step.

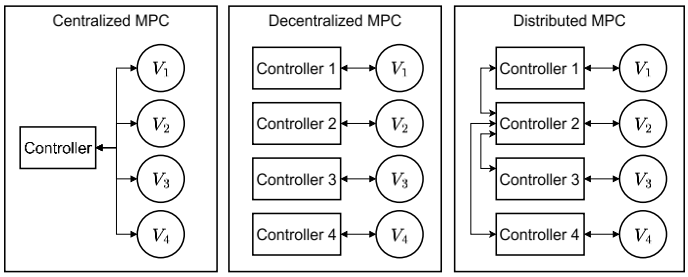


**Figure 2.2** Comparison of three configurations for four tanks $V_{1\ldots4}$ control. Centralized MPC has full system integration and global optimization. Decentralized MPC solely relies on independent models and control. Distributed MPC incorporates local optimization with information exchange.

#### 2.2.1 Decentralized MPC

Decentralized controllers solve their subsystem problems fully independently over a finite prediction horizon $N$ using local models without communication to other subsystems, as shown in Figure 2.2. Each tank $i$ optimizes an objective function Eq. (5) with $N$ variables, subject to $7N$ constraints (6) ~ (9), that minimizes variation of outflow, reference tracking errors, and overflows:

$$\min_{u_i} \sum_{k=0}^{N-1} \left( \left\| h_i(k) - h_i^{\text{ref}}(k) \right\|_{q_i}^2 + \| u_i(k+1) - u_i(k) \|_{r_i}^2 + \phi\big(h_i(k)\big) \right) \quad (5)$$

$$\text{s.t.} \quad h_i(k+1) = f_i(h_i(k), u_i(k), Q_i^{\text{in}}(k - \tau_i^{\text{in}}) \quad (6)$$

$$h_{i,\min} \le h_i(k) \le h_{i,\max} \quad (7)$$

$$u_{i,\min} \le u_i(k) \le u_{i,\max} \quad (8)$$

$$\Delta u_{i,\min} \le \Delta u_i(k) \le \Delta u_{i,\max} \quad (9)$$

where $q_i$ and $r_i$ are weighting factors for reference tracking error and control effort, respectively. A penalty function $\phi(h_i) = p_i \times \max\big(0, h_i - h_i^{\text{ovf}}\big)^2$ penalizes overflow above threshold $h_i^{\text{ovf}}$ with weighting factors $p_i$. The inter-tank flow in this case is ignored thus a pure disturbance from upstream tanks.

#### 2.2.2 Centralized MPC

Figure 2.2 indicates that Centralized MPC considers the system model as a whole and solves a single large-scale optimization problem as given in Eq. (10) with $4N$ variables, subject to totally $28N$ constraints (11) ~ (12):

$$\min_{U} \sum_{k=0}^{N-1} \left( \left\| \boldsymbol{h}(k) - \boldsymbol{h}^{\text{ref}}(k) \right\|_Q^2 + \| \boldsymbol{u}(k+1) - \boldsymbol{u}(k) \|_R^2 + \phi\big(\boldsymbol{h}(k)\big) \right) \quad (10)$$

$$\text{s.t.} \quad \boldsymbol{h}(k+1) = \boldsymbol{f}(\boldsymbol{h}(k), \boldsymbol{u}(k), \boldsymbol{u}^d(k-\boldsymbol{\tau}), \boldsymbol{Q}^{\text{in}}(k-\boldsymbol{\tau}^{\text{in}}) \quad (11)$$

$$\boldsymbol{h}_{\min} \le \boldsymbol{h}(k) \le \boldsymbol{h}_{\max} \quad (12)$$

$$\boldsymbol{u}_{\min} \le \boldsymbol{u}(k) \le \boldsymbol{u}_{\max} \quad (13)$$

$$\Delta\boldsymbol{u}_{\min} \le \Delta\boldsymbol{u}(k) \le \Delta\boldsymbol{u}_{\max} \quad (14)$$

where $\boldsymbol{h} = [h_1\ h_2\ h_3\ h_4]^T$ is the level vector. $\boldsymbol{u} = [u_1\ u_2\ u_3\ u_4]^T$ is the controller output vector. $U = [\boldsymbol{u}(0), \dots, \boldsymbol{u}(N-1)] \in \mathbb{R}^{4\times N}$ contains all control variables in the prediction horizon $N$. Only the first controller output $\boldsymbol{u}(0)$ will be applied to the system, and the process repeats at the next step using updated measurements $\boldsymbol{h}$. $\boldsymbol{Q}^{\text{in}}$ and $\boldsymbol{\tau}^{\text{in}}$ represent the inlet flow and related transport delay vector. The other symbols $Q$, $R$, $\phi$, etc., representing weighting matrices, overflow penalty, inequality constraints, etc., are similarly defined as for the Decentralized MPC.

$\boldsymbol{u}^d(k-\boldsymbol{\tau})$ represents the flow with inter-tank transport delay. The key advantage of Centralized MPC is its ability to predict and compensate for inter-tank coupling delays directly within the optimization, providing global optimal coordination of control actions.

### 2.2.3 Distributed MPC

Distributed MPC lies between centralized and decentralized approaches. Each controller solves a local problem but includes coupling term $\hat{u}_i^d(k)$ as additional inputs, typically estimated or received from neighbouring subsystems, as shown in Figure 2.2. The optimization problem for each tank $i$ is given as in Eq. (15), subject to constraints (16) ~ (19):

$$\min_{u_i} \sum_{k=0}^{N-1} \left( \left\| h_i(k) - h_i^{\text{ref}}(k) \right\|_{q_i}^2 + \| u_i(k+1) - u_i(k) \|_{r_i}^2 + \phi\big(h_i(k)\big) \right) \quad (15)$$

$$\text{s.t.} \quad h_i(k+1) = f_i(h_i(k), u_i(k), \hat{u}_i^d(k), Q_i^{\text{in}}(k-\tau_i^{\text{in}}) \quad (16)$$

$$h_{i,\min} \le h_i(k) \le h_{i,\max} \quad (17)$$

$$u_{i,\min} \le u_i(k) \le u_{i,\max} \quad (18)$$

$$\Delta u_{i,\min} \le \Delta u_i(k) \le \Delta u_{i,\max} \quad (19)$$

where the coupling effect $\hat{u}_i^d(k)$ in Eq. (16) can be estimated using, e.g., Kalman filter with augmented state (Simon, 2006, p.189). In this work, each controller receives information from other controllers according to the system topology. The process involves multiple iterations until convergence (Mercangöz and Doyle, 2007).

### 2.2.4 Simulation Settings

A sampling time of $\Delta t = 10$ s and a prediction horizon of $N = 100$ s $= 10\ \Delta t$ will be applied for the simulation. Other simulation and controller parameters are:

- Tank cross-sectional area: $A_{1\dots4} = [100, 100, 50, 50]$ m$^2$
- Control variable bounds: $\boldsymbol{u}_{\max} = [10, 10, 5, 5]^T$ m$^3$/s, $\boldsymbol{u}_{\min} = [0.1, 0, 0, 0]^T$ m$^3$/s
- State variable bounds: $\boldsymbol{h}_{\max} = [5.0, 5.0, 3.0, 3.0]^T$ m, $\boldsymbol{h}_{\min} = [1, 1, 0.5, 0.5]^T$ m
- Control actions variation bounds: $\Delta\boldsymbol{u}_{\max} = -\Delta\boldsymbol{u}_{\min} = [1, 1, 0.5, 0.5]^T$ m$^3$/s
- Level references: $\boldsymbol{h}^{\text{ref}} = [2.5, 3.5, 1.5, 1.8]^T$ m

- Overflow limits: $\boldsymbol{h}^{\text{ovf}} = [0, 4.6, 0, 2.7]^T$ m
- Weighting matrix for reference tracking: $Q = \text{diag}[1, 0.01, 0.05, 1]$,
- Weighting matrix for control actions variation: $R = \text{diag}[1.0, 1.0, 1.0, 1.0]$
- Penalty factors: $p_{1\ldots4} = 1000.0$
- Inter-tank transport delay: $\boldsymbol{\tau} = [60, 60, 30, 30]^T$ s
- Inlet flow transport delay: $\boldsymbol{\tau}^{\text{in}} = [30, 30, 60, 60]^T$ s
- For Distributed MPC: max_iterations = 3, convergence_tolerance = 1e-4.

To evaluate robustness and show the coordinated actions, scheduled step change disturbance events are applied to four tanks. The Euler forward method will be used for solving the model.

## 3. RESULTS AND DISCUSSION

The simulation results are presented in Figure 3.1, followed by sections discussing the results.

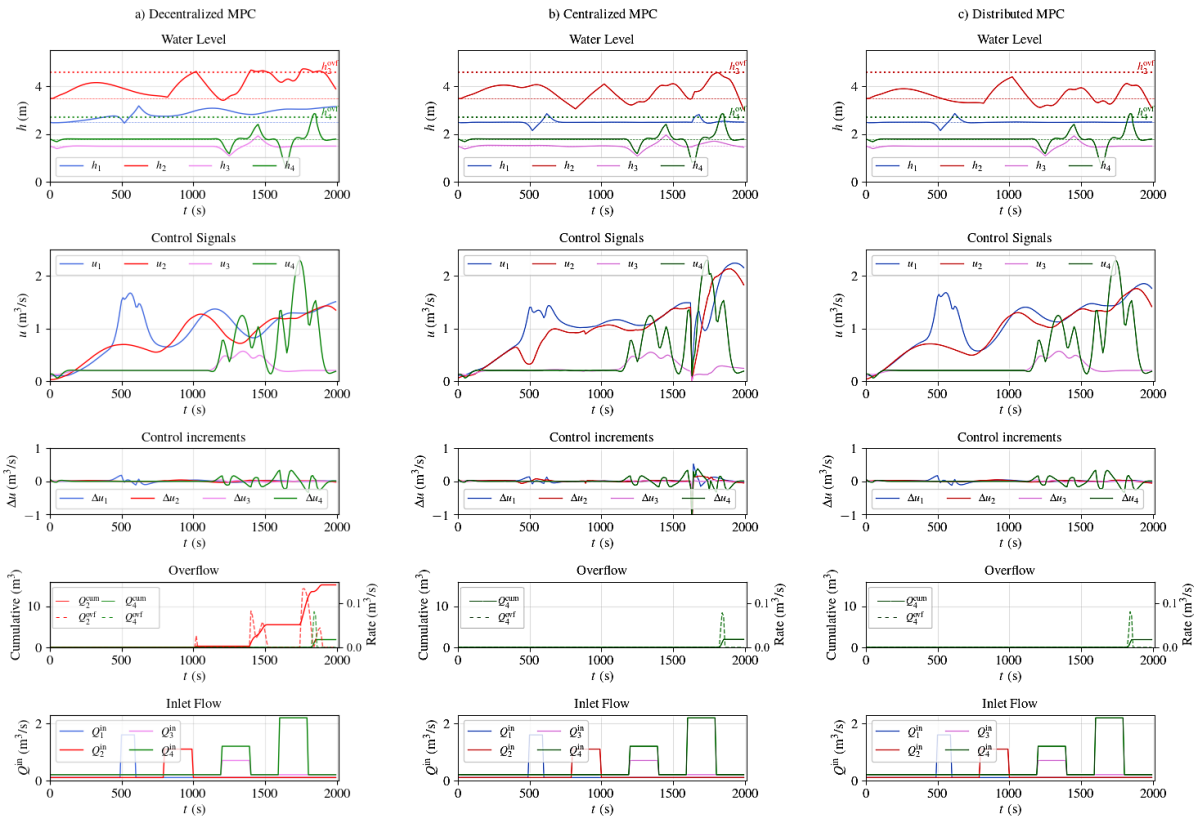


**Figure 3.1** Simulation results showing water levels $h_i$, control signals $u_i$, control increments $\Delta u_i$, overflow $Q_i^{\text{ovf}}$, and inlet flows $Q_i^{\text{in}}$ using a) Decentralized MPC, b) Centralized MPC, and c) Distributed MPC for four-tank coordinated control.

### 3.1 Water level control

The simulation results demonstrate significant differences in tracking accuracy between three MPC architectures. For example, Centralized MPC (Figures 3.1b) achieved superior tracking accuracy of $h_1$ with RMSE (Root Mean Square Error) = 0.08 m, consistently maintaining water levels close to reference values throughout the simulation period. Distributed MPC (Figure 3.1c) achieved even better reference control with RMSE = 0.06 m. In contrast, Decentralized MPC

(Figure 3.1a) showed acceptable overall level control performance, but exhibits larger deviations with RMSE = 0.41 m, particularly during disturbance events.

As a general observation for MPC, the relationship of weights $Q$ and $R$ decides the overall controller behaviours and level control performances:

- Larger $Q$ and smaller $R$ as for $V_1$ encourage closer reference tracking of $h_1$ with faster acting actuators.
- In contrast, larger $R$ and smaller Q as for $V_2$ allow more $h_2$ variation and smoother $u_2$ for averaging level control (Wang and Haugen, 2021).

### 3.2 Coordinated actions

Results in Figure 3.1a reveal that operating with independent tank controllers, Decentralized MPC suffered from reduced model precision and inadequate prediction. More reactive behaviours and delayed responses to system-wide disturbances caused relatively larger water level drift from the reference, such as for $h_1$ and $h_2$.

Centralized MPC (Figure 3.1b) exhibits excellent inter-tank coordination with smooth control transitions and proactive adjustments that anticipate downstream effects. For example, to handle $Q_1^{\text{in}}$ step change at $t = 500$ s, by decreasing $u_2$ in advance, the load on $u_1$ became less heavy in contrast to decentralized case. In addition, the controller increased $u_1$ 100 s in advance because the controller anticipated the inlet flow disturbance.

Distributed MPC (Figure 3.1c) demonstrates a balanced approach between centralized and decentralized approaches. The information exchange between neighbouring controllers enabled better anticipation of inter-tank effects compared to purely decentralized control, which helped to reduce the overflow. Meantime, the iterative optimization process allows controllers to converge toward near-optimal solutions, for example, at $t = 1600$ s, $h_1$ was maintained close to its reference by coordinated actions of $u_1$ and $u_2$ to handle $Q_4^{\text{in}}$.

### 3.3 Overflow prevention

Table 3.1 compares overflow prevention performance of three control strategies. According to the results, Centralized MPC and Distributed MPC showed nearly nine times better performance, with 38 $m^3$ total overflow versus Decentralized MPC's 341 $m^3$ and entirely prevented $V_2$ overflow, showcasing effective system-wide coordination. In addition, Centralized MPC and Distributed MPC were firmly better regarding the max duration and the maximum overflow rate.

**Table 3.1** Overflow performance comparison of three MPC architectures

| Performance metric | Centralized MPC | Decentralized MPC | Distributed MPC |
|---|---|---|---|
| $Q_2^{\text{cum}}$ [$m^3$] | 0 | 304 | 0 |
| $Q_4^{\text{cum}}$ [$m^3$] | 38 | 37 | 38 |
| Total overflow [$m^3$] | 38 | 341 | 38 |
| Maximum duration [s] | 30 ($Q_4^{\text{ovf}}$) | 300 ($Q_2^{\text{ovf}}$) | 30 ($Q_4^{\text{ovf}}$) |
| Maximum overflow [$m^3$/s] | 0.08 | 0.13 | 0.08 |

### 3.4 Fault tolerance capability

The simulation results reveal a critical vulnerability in Centralized MPC during extreme disturbance events. At 1600 seconds, the inlet flow disturbance $Q_4^{\text{in}}$ caused an optimization failure in the controller due to unsatisfied inequality constraint, leading to a system-wide breakdown affecting all subsystems simultaneously, and a backup controller took over and rescued the system. This represents the weakness of the centralized approach: a single point of failure has a global impact.

In contrast, Decentralized MPC and Distributed MPC maintained operation throughout the disturbance because the nature of individual controllers prevents system-wide failures, demonstrating greater fault tolerance.

In addition, the results imply the importance of backup controllers and high demand of communication for centralized and Distributed MPC that both rely on information exchange.

### 3.5 Computation complexity and trade-offs

The computational complexity analysis in Table 3.2 presents trade-offs between approaches.

**Table 3.2** Comparison of computation complexity of three MPC architectures

| Metric | Centralized MPC | Decentralized MPC | Distributed MPC |
|---|---|---|---|
| Decision variables | $4N$ | $N$ per subsystem | $N$ per subsystem |
| Constraints | $28N$ | $7N$ per subsystem | $7N$ per subsystem |
| Communication | Full system coupling | None | Neighbour-to-neighbour |
| Optimality | Global optimum | Suboptimal | Near-optimal |
| Convergence requirement | Single solve | Singel solve | Iterative convergence |
| Computation complexity | High | Low | Medium |

For the simulated systems with four tanks, Distributed MPC is recommended due to both fault tolerance and overflow prevention benefits from coordinated control actions. Decentralized MPC can be a preferred solution for large-scale networks choose because of scalability and fault tolerance. For critical infrastructure requiring strict overflow prevention and reference tracking, Centralized MPC is recommended.

## 4. CONCLUSIONS

To conclude, this study compares performance between Centralized, Decentralized, and Distributed MPC for urban drainage system control. Centralized MPC and Distributed MPC outperformed Decentralized approaches in overflow prevention and system coordination during disturbance events, providing more guaranteed system-wide optimization and proactive disturbance rejection. However, Centralized MPC suffered from higher computational complexity and single-point-of-failure risks. Decentralized MPC offers less computational demand and fault tolerance but exhibits suboptimal control actions and delayed response capabilities.

For system selection, Centralized MPC is recommended for small-to-medium systems where computational resources are adequate and single-point-of-failure risks are manageable. Distributed MPC is a promising balance solution for medium-to-large scale networks, offering improved coordination over decentralized approaches while maintaining superior fault tolerance compared to centralized control. Decentralized MPC remains suitable for large-scale systems where simplicity and maximum fault tolerance are prioritized.

Future research should explore implementation of three architectures in large-scale networks and real inlet flow scenarios.

## REFERENCES

García-Gutiérrez, L., Barreiro-Gómez, J., Escobar, E., Téllez, D., Quijano, N. & Ocampo-Martínez, C. 2015. Modeling and real-time control of urban drainage systems: A review. *Adv. Water Resour.*, **85**, pp. 120–132. https://doi.org/10.1016/j.advwatres.2015.08.007

Haugen, F. 2010. *Advanced Dynamics and Control*. TechTeach.

Lund, NSV, Falk, AKV, Borup, M, Madsen, H & Mikkelsen, PS 2018, 'Model predictive control of urban drainage systems: A review and perspective towards smart real-time water management', *Critical Reviews in Environmental Science and Technology*, vol. 48, no. 3, pp. 279-339. https://doi.org/10.1080/10643389.2018.1455484

Mercangöz, M. & Doyle, F.J. III. 2007. Distributed model predictive control of an experimental four-tank system. *J. Process Control*, **17**(3), pp. 297–308. https://doi.org/10.1016/j.jprocont.2006.11.003

Simon, D. 2006. *Optimal State Estimation: Kalman, H Infinity, and Nonlinear Approaches*. John Wiley & Sons. https://doi.org/10.1002/0470045345

VEAS. 2018. *From Sewage Treatment Plant to Biorefinery*. Report of VEAS. https://veas.nu/uploads/2023/11/5155-VEAS-profileringsbrosjyre-A5-ENG-v1-oppslag.pdf [Accessed 12 December 2024]

Venkat, A.N. 2006. *Distributed Model Predictive Control: Theory and Applications*. PhD thesis, University of Wisconsin–Madison.

Wang, Y. & Haugen, F.A. 2021. Averaging level control for urban drainage system. In: *Proceedings of SIMS EUROSIM 2021*, Virtual, Finland, 21–23 September 2021. *Linköping Electronic Conference Proceedings*, **200**, pp. 4052–4064. https://doi.org/10.3384/ecp21185405