ICA2025OSLO
14th IWA Specialised Conference on
Instrumentation, Control and Automation

# Monitoring and control system for the enrichment stage in the production of polyhydroxyalkanoates

A. Ríos-Mejía, V. Sandoval-García, Á. Robles, L. Borrás, M.V. Ruano

CALAGUA – Unidad Mixta UV-UPV, Departament d'Enginyeria Química, ETSE-UV, Universitat de València, Avinguda de la Universitats/n, 46100 Burjassot, Valencia, Spain. (e-mail: alejandro.rios@uv.es, valeria.sandoval@uv.es angel.robles@uv.es, luis.borras-falomir@uv.es, m.victoria.ruano@uv.es)

**Abstract:** This work focuses on online monitoring during the PHA enrichment phase in a bench-scale sequential batch reactor using synthetic VFAs. Parameters like pH, DO, and ORP were monitored to optimize reactor performance. The system operated under feast-famine cycles, showing microbial activity patterns linked to VFA consumption and PHA accumulation. The optimal PHA accumulation point, which coincides with the point of total substrate consumption, was identified, enabling precise phase control for improved efficiency and scalability. This approach advances the development of a complete monitoring and control system for PHA production.

**Keywords**: Soft sensor; PHA; Enrichment; Monitoring and control system.

## INTRODUCTION

The environmental impact of fossil-based plastics is a growing global issue, intensified by rising demand. Bioplastics offer a sustainable alternative within the Circular Bioeconomy (Bhatia et al., 2021; Guarda et al., 2024). In this respect, there is a growing interest in producing bioplastics using volatile fatty acids (VFA) enriched from the effluent of dark fermentation (DF) processes (Andreasi Bassi et al., 2021; George et al., 2021). In this sense, polyhydroxyalkanoates (PHAs) are a good option due to both their properties and their applications (Guarda et al., 2024). However, PHA production from DF effluents using mixed microbial cultures is not economically competitive with conventional plastic production nowadays (Saratale et al., 2021). Thus, extensive research is required to improve PHA production by optimizing both the operating conditions and the reactor configuration. Moreover, PHA production is currently monitored using offline, time-consuming methods that rely on hazardous solvents. These methods do not allow real-time control of bioprocesses, often leading to reduced productivity and limiting their scalability for full-scale implementation (Guarda et al., 2024; Gutschmann et al., 2019).

PHA production often consists of batch operations divided into two phases: i) culture enrichment phase, and ii) PHA production/accumulation phase (Moretto et al., 2020; Rodriguez-Perez et al., 2018). Different operating conditions are relevant parameters affecting PHA production in the system, such as: type of substrate, carbon load, sludge retention time (SRT), hydraulic retention time (HRT), nutrient content, dissolved oxygen (DO) concentration, C/N/P ratio, pH, feast-to-famine ratio, feeding strategy, and reactor environment (Valentino et al., 2017). In a further important aspect, online monitoring of parameters such as pH, DO, redox, etc., is essential for the follow-up, knowledge and control of the process. This ability not only allows the determination of the harvesting time or the level of PHA accumulated in the microorganisms, but also a better production efficiency (Kedia et al., 2013).

This work focuses on online monitoring during the production of PHA (enrichment phase) from the effluent of a DF process using bench-scale sequential batch reactor (SBR). A soft-sensor and a control system are being developed using the data shown here.

## MATERIAL AND METHODS

Figure 1 illustrates the flow diagram of the bench-scale SBR for PHA enrichment used in this project. The reactor has a working volume of 7 L and has been operated so far under feast-famine

cycles of 24 hours with aerobic dynamic feeding (pulse feed strategy at the beginning of feast), constant aeration intensity (around 1 L/min) and controlled temperature (25 ºC). Activated sludge from a full-scale WWTP was used as inoculum. At this stage, the system was fed with synthetic VFA media simulating the characterization of the supernatant from a DF process treating food waste and sewage sludge.

DO, ORP, pH and temperature were online monitored. All sensors and actuators were connected to a supervisory control and data acquisition (SCADA) software (own developed) to control and monitor process performance.

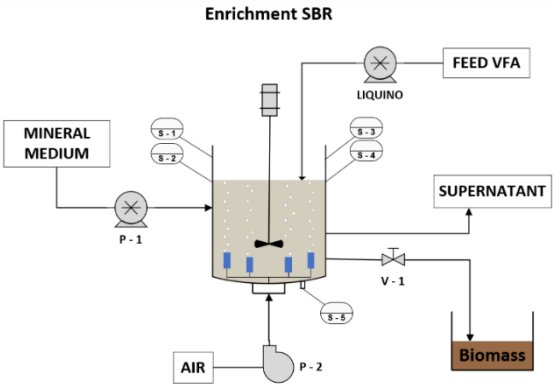


**Figure 1** Scheme of the SBR for PHA enrichment at bench-scale.

## RESULTS AND CONCLUSIONS

By way of example, Figure 2 shows the pH, DO and ORP dynamics in the PHA enrichment reactor during one feast-famine cycle, while Figure 3 shows a detailed view of these dynamics during the feast phase. At the beginning of the feast phase, the pH decreased due to the feeding of VFA, although it immediately increases as microorganisms uptake the VFA and convert it into internal energy in the form of PHA. This activity is also reflected in the DO and ORP sensor profiles. As VFA are consumed, the DO and ORP profiles decrease and remain low, due to oxygen required for microbial activity. Once the VFA are fully consumed, as confirmed in Figure 4, the DO and ORP values return to high levels, coinciding with the maximum intracellular PHA storage, as shown in Figure 5, i.e. the optimal point under these conditions. At this point, the actual famine phase begins, as there is no more substrate to consume.

The online data obtained allows for the optimization of process performance. For instance, identifying the exact time when all the substrate is depleted enables the optimization of the feast-famine ratio, thereby favoring the proliferation of PHA-accumulating microorganisms. Indeed, this data is being used to develop a soft-sensor and a control system for the process (data not shown yet).

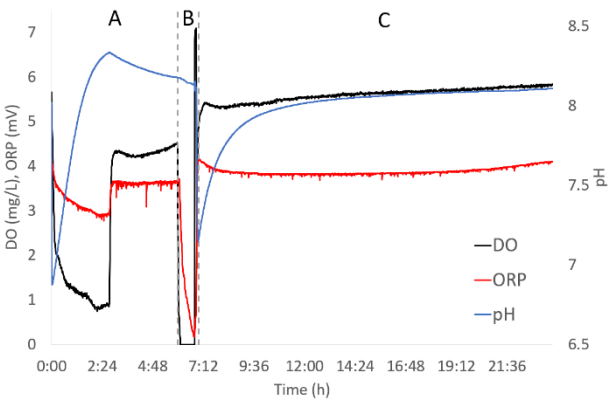


**Figure 2**. pH, DO and ORP dynamics in the PHA enrichment reactor. Zone A: feast phase; Zone B: sedimentation phase for the removal of supernatant and filling with mineral medium; Zone C: famine

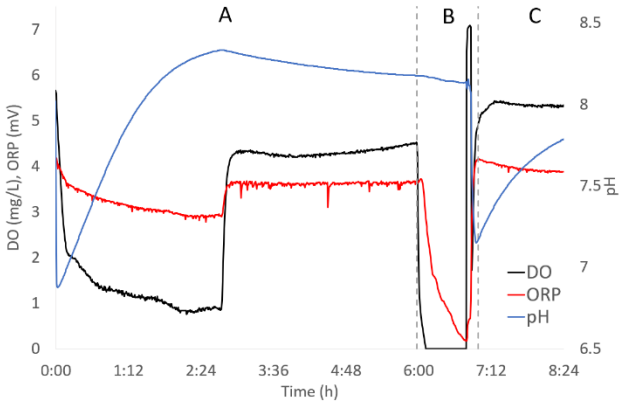


**Figure 3**. Detailed view of the pH, DO and ORP dynamics in feast phase.

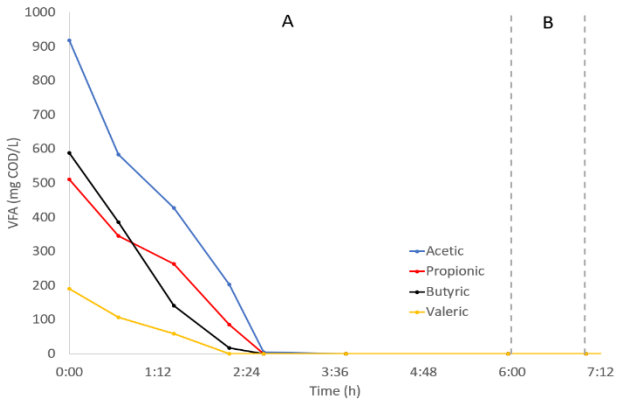


**Figure 4.** Consumption of synthetic VFA in the feast phase.

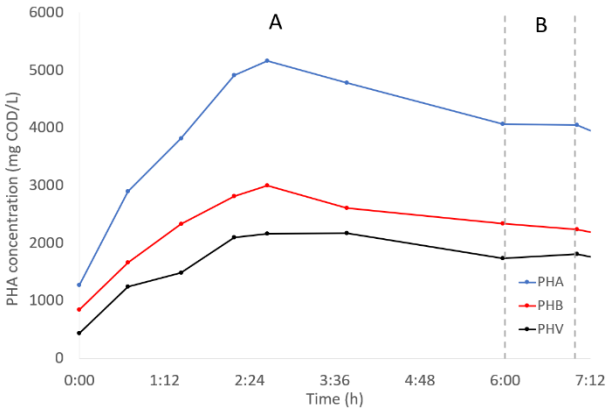


**Figure 5.** Concentrations of polyhydroxybutyrate (PHB), polyhydroxyvalerate (PHV) and PHA in the feast phase.

## ACKNOWLEDGMENTS

Grant PID2021-128426OA-I00 funded by MCIN/AEI/10.13039/501100011033 and by ERDF A way of making Europe, European Union.

Grant TED2021-132837A-I00 funded by MCIN/AEI/10.13039/501100011033 and by the European Union NextGenerationEU/PRTR.

Grant CIAICO/2023/165 funded by Conselleria de Educación, Cultura, Universidades y Empleo, Generalitat Valenciana

## REFERENCES

Andreasi Bassi, S., Boldrin, A., Frenna, G., & Astrup, T. F. (2021). An environmental and economic assessment of bioplastic from urban biowaste. The example of polyhydroxyalkanoate. *Bioresource Technology*, *327*. https://doi.org/10.1016/j.biortech.2021.124813

Bhatia, S. K., Otari, S. V., Jeon, J. M., Gurav, R., Choi, Y. K., Bhatia, R. K., Pugazhendhi, A., Kumar, V., Rajesh Banu, J., Yoon, J. J., Choi, K. Y., & Yang, Y. H. (2021). Biowaste-to-bioplastic (polyhydroxyalkanoates): Conversion technologies, strategies, challenges, and perspective. In *Bioresource Technology* (Vol. 326). Elsevier Ltd. https://doi.org/10.1016/j.biortech.2021.124733

George, N., Debroy, A., Bhat, S., Singh, S., & Bindal, S. (2021). Biowaste to bioplastics: An ecofriendly approach for a sustainable future. *Journal of Applied Biotechnology Reports*, *8*(3), 221–233. https://doi.org/10.30491/jabr.2021.259403.1318

Guarda, E. C., Galinha, C. F., Duque, A. F., & Reis, M. A. M. (2024). Non-invasive and real-time monitoring of polyhydroxyalkanoates production using two-dimensional fluorescence spectroscopy. *Journal of Environmental Management*, *370*. https://doi.org/10.1016/j.jenvman.2024.122545

Gutschmann, B., Schiewe, T., Weiske, M. T. H., Neubauer, P., Hass, R., & Riedel, S. L. (2019). In-line monitoring of polyhydroxyalkanoate (PHA) production during high-cell-density plant oil cultivations using photon density wave spectroscopy. *Bioengineering*, *6*(3). https://doi.org/10.3390/bioengineering6030085

Kedia, G., Passanha, P., Dinsdale, R. M., Guwy, A. J., Lee, M., & Esteves, S. R. (2013). Addressing the challenge of optimum polyhydroxyalkanoate harvesting: Monitoring real time process kinetics and biopolymer accumulation using dielectric spectroscopy. *Bioresource Technology*, *134*, 143–150. https://doi.org/10.1016/j.biortech.2013.01.136

Moretto, G., Russo, I., Bolzonella, D., Pavan, P., Majone, M., & Valentino, F. (2020). An urban biorefinery for food waste and biological sludge conversion into polyhydroxyalkanoates and biogas. *Water Research*, *170*. https://doi.org/10.1016/j.watres.2019.115371

Rodriguez-Perez, S., Serrano, A., Pantión, A. A., & Alonso-Fariñas, B. (2018). Challenges of scaling-up PHA production from waste streams. A review. In *Journal of Environmental Management* (Vol. 205, pp. 215–230). Academic Press. https://doi.org/10.1016/j.jenvman.2017.09.083

Saratale, R. G., Cho, S. K., Saratale, G. D., Kumar, M., Bharagava, R. N., Varjani, S., Kadam, A. A., Ghodake, G. S., Palem, R. R., Mulla, S. I., Kim, D. S., & Shin, H. S. (2021). An overview of recent advancements in microbial polyhydroxyalkanoates (Pha) production from dark fermentation acidogenic effluents: A path to an integrated bio-refinery. In *Polymers* (Vol. 13, Issue 24). MDPI. https://doi.org/10.3390/polym13244297

Valentino, F., Morgan-Sagastume, F., Campanari, S., Villano, M., Werker, A., & Majone, M. (2017). Carbon recovery from wastewater through bioconversion into biodegradable polymers. In *New Biotechnology* (Vol. 37, pp. 9–23). Elsevier B.V. https://doi.org/10.1016/j.nbt.2016.05.007