ICA2025OSLO
14th IWA Specialised Conference on
Instrumentation, Control and Automation

# A Fault Detection Framework for Imbalanced Data Distribution Using Benchmark Simulation Model No. 2-M

Pedram Ramin*, Morteza Zadkarami*,**, Ali Akbar Safavi**, Elham Ramin*, Ulf Jeppsson***, Krist V. Gernaey*, Xavier Flores-Alsina*

*Process and Systems Engineering Center (PROSYS), Department of Chemical and Biochemical Engineering, Technical University of Denmark, Building 228A, DK-2800, Kgs. Lyngby, Denmark, pear@kt.dtu.dk
**School of Electrical and Computer Engineering, Shiraz University, 71946-84334, Iran, zadkarami@gmail.com
***Division of Industrial Electrical Engineering and Automation, Department of Biomedical Engineering, Lund University, Box 118, SE-221 00, Lund, Sweden

**Abstract:** To further advance monitoring of WTTPs, a new benchmark simulation model called BSM2-M has been developed. This plant-wide model is specifically designed to simulate a wide range of sensor/actuators faults and evaluate monitoring algorithms. Computer simulations are used to develop a fault detection framework that deals with imbalanced data distribution and big data complexities. Following pre-processing steps (feature selection and under sampling) and wavelet-based feature analysis, faults were detected using a multi-layer perceptron neural network. The framework achieved substantial increases for both sensitivity and specificity from 74% (without pre-processing) to over 98% (with pre-processing) across all fault scenarios (instrumentation fault, process fault and both).

**Keywords**: Benchmark simulation; imbalanced classification; process monitoring; wastewater treatment plants

## INTRODUCTION

Instrumentation, control and automation for industrial chemical and biochemical processes to attain cost-effective and safe process operation are highly dependent on reliability of real-time measurements. Despite considerable advancements in online sensors over the past decades, their reliability remains impaired due to fouling and failure issues. Regardless of a large number of available signals, data reconciliation and validation for online instrumentation has remained a largely unexplored field with a lack of standardized approaches. Most data are stored unstructured, with a large number of gaps, repetition, ambiguity and uncertainty. This has led to "data-rich, information-poor" situations in which data sets are often too large and complex for processing and analysis to be used for decision-making. To turn raw data into useful and actionable information, data need to be validated. The authors hypothesize that this can be achieved through a fault-detection procedure. The IWA Benchmark Simulation Model No. 1 (BSM1) and No. 2 (BSM2) (Jeppsson et al. 2006; Gernaey et al. 2014) describe typical biological and physico-chemical processes in WWTPs. The BSM1 includes a five-reactor activated sludge (AS) plant configuration with a (non-reactive) secondary clarifier, while the BSM2 provides a plant-wide description of a typical WWTP, extending BSM1 with pretreatment and sludge treatment processes. An extension to BSM1, named BSM1-LT, was also developed (Rosen et al. 2004) to enable long-term evaluation of control strategies (e.g. sludge retention time control based on wastewater flowrate) and process monitoring performance (e.g. detecting equipment failure such as nitrate and ammonium sensors).

The aim of this study is to present a benchmark simulation tool for wastewater treatment processes by including "realistically" different sensor/actuator and process faults which are compatible and unified with the previous developments (influent generator, process models, sensor and actuator models, simulation procedure, evaluation criteria) (Ramin et al. 2022). For a more practical and realistic interpretation, a specific challenge of imbalanced data distribution (much higher number of normal data compared to faulty data) is addressed in this study with a fault detection framework.

## METHODOLOGY

Two different types of faults, actuator fault and process fault, were investigated. Actuators faults were created only for $k_La$ (oxygen mass transfer coefficient, equivalent to airflow in aerated reactors). Process faults include bulking conditions (i.e., changing settling parameters in the

secondary clarifier). Faults were described using a Markov-chain approach, where five different states were considered for each actuator (fully functional, excessive drift, shift, fixed value, complete failure), and two states were considered for process upsets (normal, bulking). The model followed the same recommendation as an earlier study (Rosen et al. 2008) by defining: 1) the probability of fault occurrence and 2) probability of transitions from one state to another. **Figure 1** provides a schematic overview of the plant layout and flow structure of the Benchmark Simulation Model No. 2 (BSM2). 31 measurements were selected with locations distributed across critical units and streams. These locations are chosen to capture key parameters that are relatively easy to measure and crucial for monitoring operational conditions. The system is simulated over 609 days, with a sampling interval of 1 minute, resulting in 876960 sample points.

A novel fault detection framework is designed to address challenges associated with imbalanced big data. The framework consists of multiple stages. Initially, an advanced preprocessing stage is implemented, comprising a measurement selection method based on mutual information theory and a novel under-sampling technique. The measurement selection algorithm identifies critical measurements by evaluating their contribution to fault detection and minimizing redundancy, while the under-sampling method utilizes Gaussian Mixture Models (GMM) to systematically eliminate redundant data from the majority class, ensuring the preservation of the class's core patterns (Zadkarami et al. 2024). Subsequently, a wavelet-based feature extraction method is applied, using multiresolution analysis and energy-to-entropy ratio evaluation to derive meaningful features from the selected measurements. This approach ensures that both the dominant signal characteristics and noise-reduced details are captured. These features are then processed by a two-layer Multilayer Perceptron Neural Network (MLPNN) classifier optimized for handling non-linear and noisy data distributions. The overview of the wavelet-based feature extraction applied in this study is shown in **Figure 2**. The framework's performance is evaluated on fault scenarios with the metrics of accuracy, precision, True Positive Rate (TPR), True Negative Rate (TNR), Area Under the Curve (AUC) and Geometric Mean (Gmean).

## RESULTS AND DISCUSSIONS

The ranking results of the measurements for each fault scenario reveal that measurements 1, 6, 11, 24, 27, 28, and 30 consistently rank among the top ten most valuable for detecting faults in the BSM2 system (see **Figure 1** for details). Conversely, measurements 4, 5, 12, and 16 are identified as the least important, offering minimal value for fault detection, and were thus excluded from further analysis. The subsequent under-sampling technique effectively reduces the imbalance ratios (ratio of normal to faulty data points) for process fault, instrumentation fault (i.e. actuator fault), and combined fault scenarios from 15.18, 15.57, and 7.21 to 4.90, 5.32, and 3.83, respectively. The selective removal ensures that the underlying characteristics of the normal condition are retained, thus avoiding information loss and improving the framework's ability to differentiate between normal and faulty conditions. An example of data for under-sampling and approximation is depicted in **Figure 3**. As a result, the framework achieved substantial increases in performance metrics. The AUC (used to evaluate the randomness of the classifier's result) and Gmean (square root of the product TPR and TNR indicative of both sensitivity and specificity) values improved from approximately 77% and 74% (without preprocessing) to over 98% (with preprocessing) across all fault scenarios, indicating superior classification balance and accuracy (**Table 1**). Additionally, the simulation runtime was reduced nearly threefold, showcasing the framework's efficiency in managing large datasets while maintaining high fault detection reliability.

While this study focuses on fault detection with two classes, a future study will assess the multi-class classification problem. Further extensions will also include fault isolation and diagnosis.

## CONCLUSIONS

The BSM2-M presented provides opportunities to create realistic scenarios for instrumentation and process faults. Using this platform, one can test the performance of a fault detection method under realistic conditions. The presented fault detection framework addresses the challenges related to imbalanced and large-scale datasets by incorporating advanced pre-processing techniques and an under-sampling approach. Wavelet-based feature extraction further enhance fault detection accuracy by capturing key signal characteristics. Overall, the BSM2-M provides a practical solution to develop WWTP monitoring techniques, such as the presented framework.

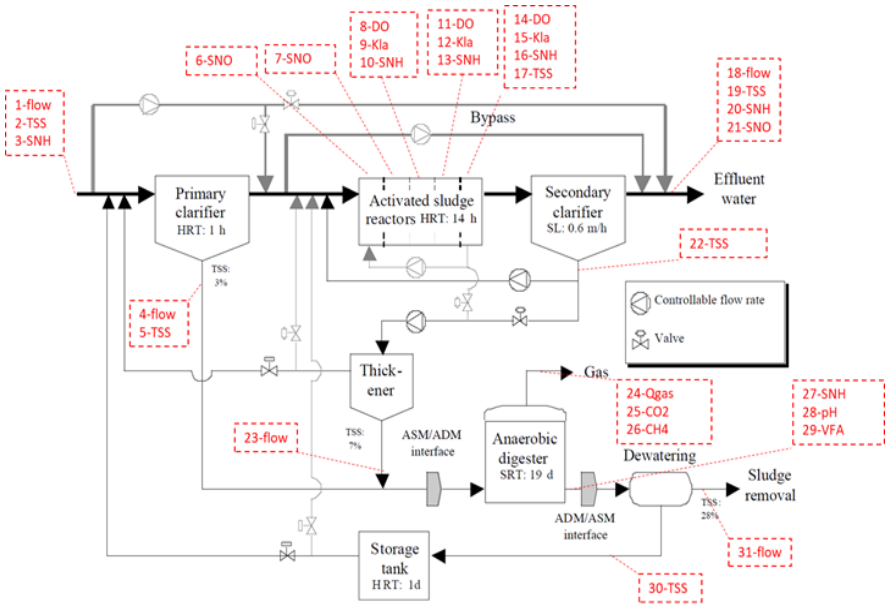


**Figure 1** The BSM2 plant layout along with the location of the considered measurements

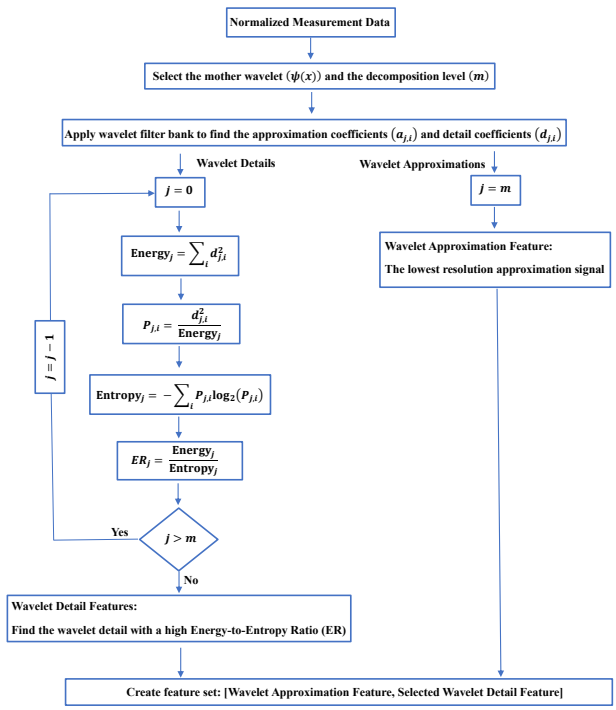


**Figure 2** The flowchart of the wavelet-based feature extraction used in this study

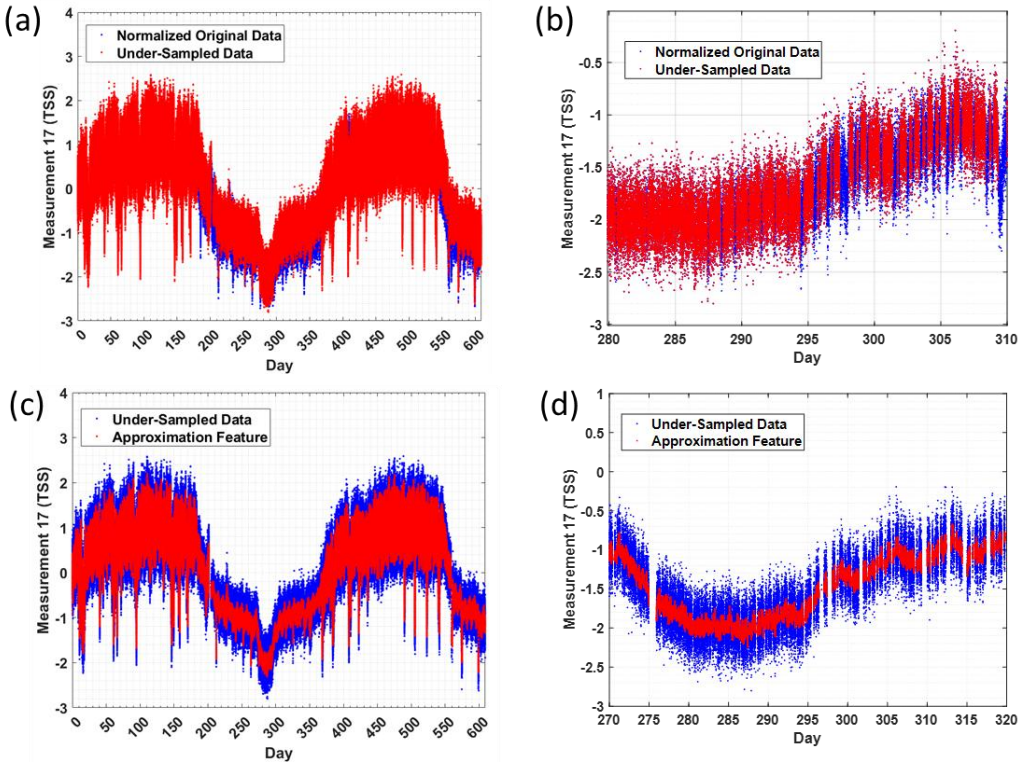


**Figure 3** Comparison between the under-sampled data and their original pattern for measurement 17 shown for the entire period (a) and selected period of 30 days (b). The feature-set of the wavelet approximation for measurement 17 shown for the entire period (c) and selected period of 30 days (d).

**Table 1** Obtained fault detection results with the framework presented in this study

| Fault Scenario | Method | Accuracy | Precision | TPR | TNR | AUC | Gmean | Time (s) |
|---|---|---|---|---|---|---|---|---|
| Process | Without the advanced preprocessing stage | 0.975 | 0.976 | 0.998 | 0.625 | 0.812 | 0.79 | 1889 |
| | With the advanced preprocessing stage | 0.998 | 0.999 | 0.998 | 0.996 | 0.997 | 0.997 | 222 |
| Instrumentation | Without the advanced preprocessing stage | 0.965 | 0.966 | 0.999 | 0.46 | 0.73 | 0.678 | 1605 |
| | With the advanced preprocessing stage | 0.996 | 0.996 | 0.999 | 0.973 | 0.986 | 0.986 | 651 |
| Simultaneous | Without the advanced preprocessing stage | 0.942 | 0.943 | 0.993 | 0.57 | 0.782 | 0.752 | 1657 |
| | With the advanced preprocessing stage | 0.992 | 0.992 | 0.998 | 0.971 | 0.985 | 0.984 | 774 |

## REFERENCES

Gernaey KV, Jeppsson U, Vanrolleghem PA, Copp JB (2014) Benchmarking of Control Strategies for Wastewater Treatment Plants. IWA Publishing.

Jeppsson U, Rosen C, Alex J, et al (2006) Towards a benchmark simulation model for plant-wide control strategy performance evaluation of WWTPs. Water Sci Technol 53:287–295.

Ramin P, Flores-Alsina X, Topalian SON, et al (2022) Fault detection in a benchmark simulation model for wastewater treatment plants. Elsevier Masson SAS.

Rosen C, Jeppsson U, Vanrolleghem PA (2004) Towards a common benchmark for long-term process control and monitoring performance evaluation. Water Sci Technol 50:41–49.

Rosen C, Rieger L, Jeppsson U, Vanrolleghem PA (2008) Adding realism to simulated sensors and actuators. Water Sci Technol 57:337–344.

Zadkarami M, Safavi AA, Gernaey KV., Ramin P (2024) A Process Monitoring Framework for Imbalanced Big Data: A Wastewater Treatment Plant Case Study. IEEE Access 12:132139–132158.