ICA2025OSLO
14th IWA Specialised Conference on
Instrumentation, Control and Automation

# The Importance of Secondary Integral Windup Protection for Controlling Biological Systems

L. Rieger*, O. Schraa*, A. Gagnon**, U. Papukchiev***

*Jacobs, Toronto ON, Canada, leiv.rieger@jacobs.com, oliver.schraa@jacobs.com

** Hampton Roads Sanitation District, Norfolk, VA, USA, agagnon@hrsd.com

***Jacobs, Irvine, CA, USA, uri.papukchiev@jacobs.com

**Abstract:** The presented work discusses secondary integral windup protection for PID controllers. It could be shown that secondary integral windup can significantly improve control performance under constraint conditions coming from the biological nature of the activated sludge process or from poorly sized equipment. Special attention is given to implementing secondary windup protection for ammonia-based aeration control. Two full-scale examples and a simulation study are provided to support the conclusions.

**Keywords**: PID control, primary and secondary integral windup protection

## Introduction

Most wastewater treatment related processes can be sufficiently controlled by feedback PID-type controllers. However, increasing demands in terms of water quality and resource consumption require tighter control. A specific problem of biological systems is that oftentimes the controller output bounds are reached, which leads to a disruption of the control action and subsequently to an accumulation of the integral term of the PID controller, which is also called integral windup. This output saturation or primary windup problem is dealt with in any standard PID implementation by stopping the integral accumulation if a controller output bound is reached (Olsson & Newell, 1999). Integral windup is problematic because when the controller can again move freely the windup prevents the controller from moving away from the bound because it must first reduce the wound-up integral term. This leads to the controller staying on bounds longer than necessary and when a controller is on a bound it can no longer keep the controlled variable at its setpoint.

The problem discussed in this work is secondary integral windup (Carlsson *et al*. 2017) and happens in a controller cascade when an inner loop reaches a bound, but the outer loop is unaware of the restriction and continues to adjust its output and eventually reaches its own output bound. Modern commercial PID implementations have functionality to connect a windup signal to the outer loops, however, this is very rarely used in wastewater treatment practice.

A special case is a control concept where the most outer loop serves multiple loops or cascades. An example is ammonia-based aeration control (ABAC) (*Figure 3*), where the outer ammonia loop serves multiple DO-airflow cascades to control aeration zones in series (within one train) or both in series and in parallel if one ammonia analyzer is serving multiple trains. If all inner cascades would be connected to the single ammonia loop, the ammonia controller would stop increasing the DO setpoints in all underlying cascades if only one sends a windup signal. Carlsson *et al*. (2017) proposed to only switch the ammonia controller into secondary windup protection mode if all underlying DO-airflow cascades would be in windup mode. However, that would mean that the DO setpoint sent to the cascades already in windup mode would still increase or decrease and potentially lead to sluggish behaviour and overcompensation. Another solution proposed here is to add an ammonia loop on top of every DO-airflow cascade (*Figure 4*). This means additional complexity in coding, user interface setup, and maintenance such as tuning. However, the setup would allow full secondary integral windup protection (SIWP).

This work demonstrates the impact of secondary integral windup protection for a DO-airflow control cascade at two full-scale plants in the USA. The implementation of SIWP also for ABAC highlighted the problems discussed above. A comparison of the two options is based on a simulation with the full-scale implementation expected to follow in spring 2025.

**Full-Scale Case Study 1**

The Agua Nueva WRF in Pima County, Arizona is a scalping plant currently receiving a daily average of 25-28 MGD with a distinct and very regular daily pattern. The secondary treatment stage consists of 4 parallel basins in a three-pass step-feed five-stage-Bardenpho bioreactor system and secondary clarifiers, prior to a disk filter system and disinfection with chloramines. The objectives of the aeration controls were to a) deal with the extreme dynamics of the influent flow and loads, and b) control ammonia prior to the disinfection tank to a band of 1.5 ±0.5 mgN/L to minimize external ammonia dosage for the chloramination system and the actual dosage of sodium hypochlorite.

Due to several factors, the air supply system is not able to deliver the required system header pressure during high load situations and limited blower turn-down causes blower cycling during low load situations. Accepting the current limitations, it was clear that the air distribution control system would regularly hit its controller output bounds. One solution studied and implemented was SIWP to make the control system more reactive and minimize periods with limited control.

Figure 1 compares the control system performance before and after implementing SIWP for the DO control loops. Without the SIWP, the airflow loop saturates, and the primary integral windup protection takes effect. However, the DO control loop keeps winding up until it reaches its output bounds as well. Since the DO loop requests higher than necessary airflows, the airflow loop stays in windup mode longer than required. After implementing the SIWP, the DO loop stops saturating completely and both control loops show a much smoother response. Interesting is, that in the shown situation the ammonia loop shows a much smoother performance even without a SIWP implemented yet. However, analyzing further, the ammonia loop shows clear signs of windup behaviour. The impact of implementing SIWP in the ABAC loop will be explored in the full paper using both full-scale data and a simulation study.

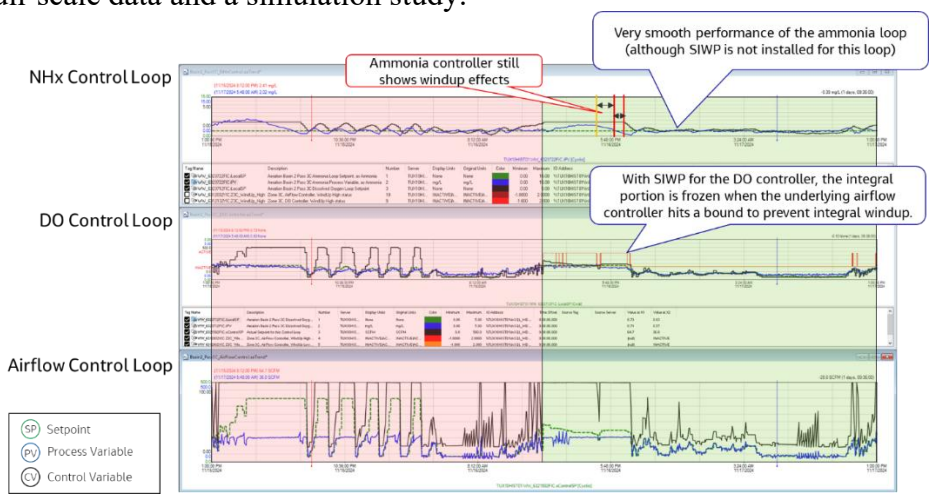


**Figure 1** Air distribution controller cascade before and after installing secondary integral windup protection (SIWP).

**Full-Scale Case Study 2**

The Hampton Roads Sanitation District's (HRSD) Army Base (AB) treatment plant in Norfolk, VA is a 5-stage Bardenpho treatment plant (10 MGD average, 18 MGD design). ABAC was

implemented with Most-Open-Valve header pressure control and overpressure excess air blowoff control to maximize aeration valve control authority. Controller upper and lower bounds were set to achievable ranges by the aeration system. Figure 2 shows the impact of raising the minimum bound of the ABAC dissolved oxygen setpoint on performance.

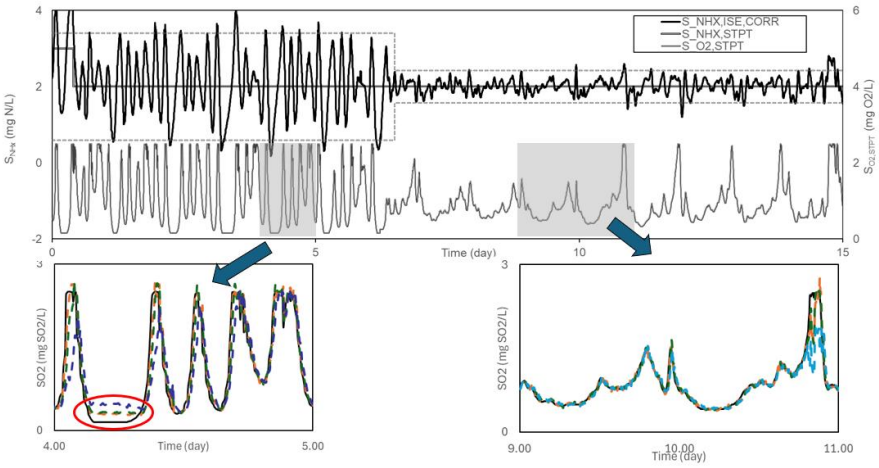


**Figure 2:** ABAC performance at ABTP before (0-6 day) and after (6-15 day) the minimum DO setpoint range was raised to an achievable value by the control system effectively bypassing integral windup.

**Simulation Study**

The simulation study uses a model of the example EPA Fine Pore Aeration Systems Design Manual (USEPA, 1989) implemented in SIMBA# (*Figure 5*). The maximum header pressure was artificially limited to showcase the impact of secondary windup under constraint operation. The following scenarios are simulated and evaluated:

- Baseline (no SIWP)
- SIWP only for the DO control loops
- SIWP for all loops including ammonia loop (Option 1 with max condition)
- SIWP for all loops including ammonia loop (Option 2 with ammonia loops in every air distribution cascade)

Similar to the full-scale studies, the simulation results confirm the importance of SIWP for situations when the control setpoints cannot be reached due to the biological nature of the process or equipment limitations. Full results will be shown and discussed in the full paper.

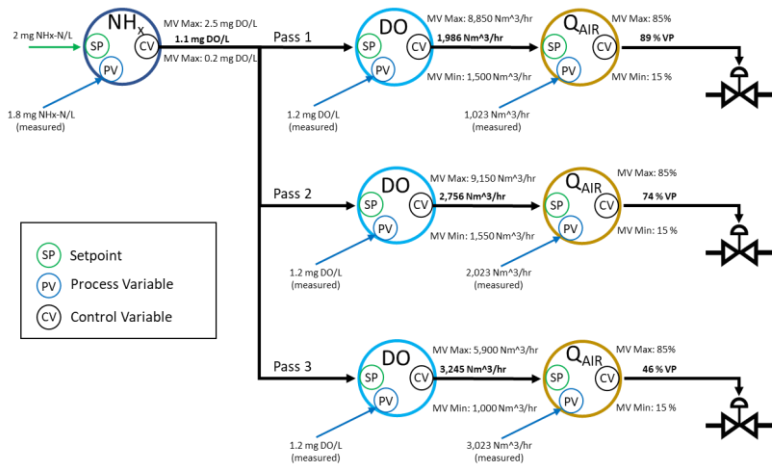


**Figure 3:** Ammonia-based aeration control Option 1: Classic setup allowing limited secondary integral windup protection.

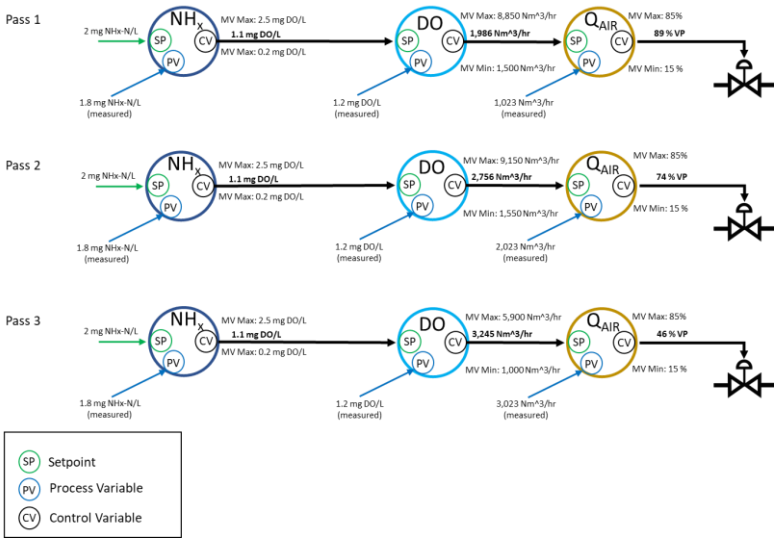


**Figure 4:** Ammonia-based aeration control Option 2: More complex setup allowing full secondary integral windup protection.

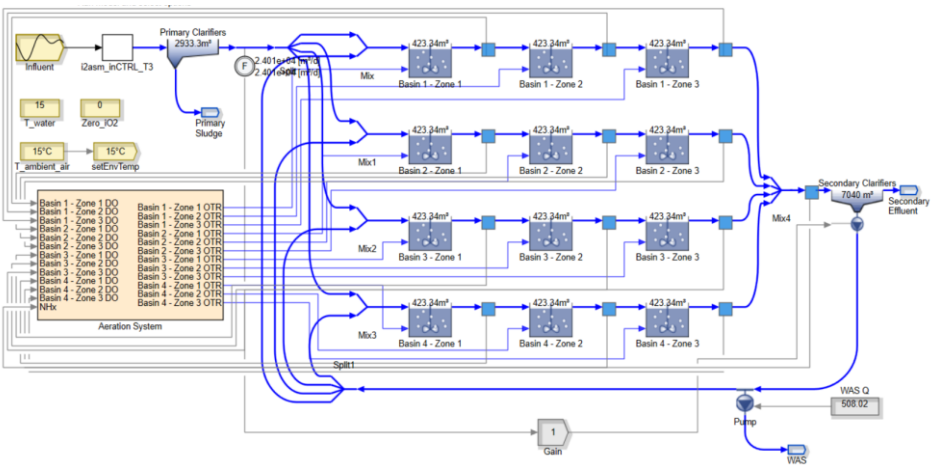


**Figure 5:** Example plant from US EPA Fine Pore Aeration Systems Design Manual as implemented in SIMBA#.

## REFERENCES

Carlsson, B., Ahlstroem, M., Blomstrand, P., Halvarsson, L. & Jemander, R. 2017 Anti-windup design for supervisory ammonium controllers in nitrifying activated sludge processes. *Proc. 12th IWA Specialized Conference on Instrumentation, Control and Automation*, 11-14 June 2017, Quebec QC, Canada.

Olsson G. & Newell, B. 1999 *Wastewater Treatment Systems – Modelling, diagnosis and control*. IWA Publishing London.

US EPA (1989). Design Manual – Fine Pore Aeration Systems. EPA/625/1-89/023.